THE INFORMATION DISCLOSED HEREIN WAS ORIGINATED BY AND IS THE PROPERTY OF DAICO INDUSTRIES, AND EXCEPT FOR RIGHTS EXPRESSLY GRANTED TO THE UNITED STATES GOVERNMENT, DAICO INDUSTRIES RESERVES ALL PATENT, PROPRIETARY, DESIGN, USE, SALE, MANUFACTURING AND REPRODUCTION RIGHTS THERETO.

REVISIONS				
LTR	DESCRIPTION	BY	DATE	APPROVED
A	REVISED & REDRAWN	[illegible]	9/21/82	[illegible]

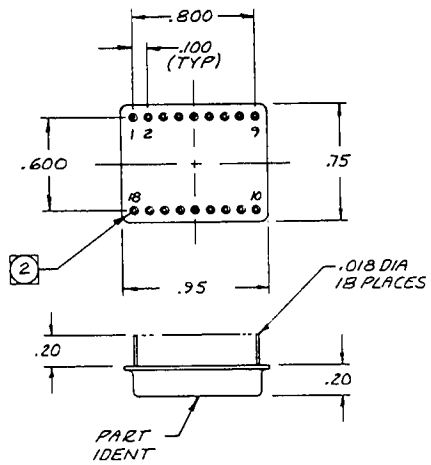

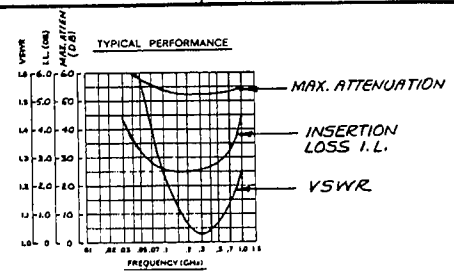

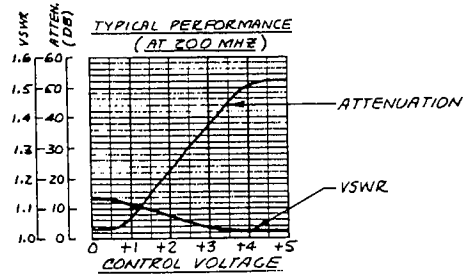

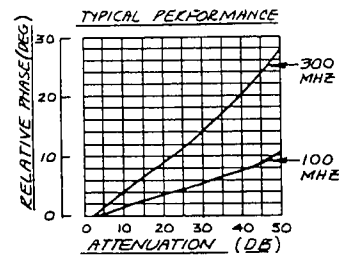

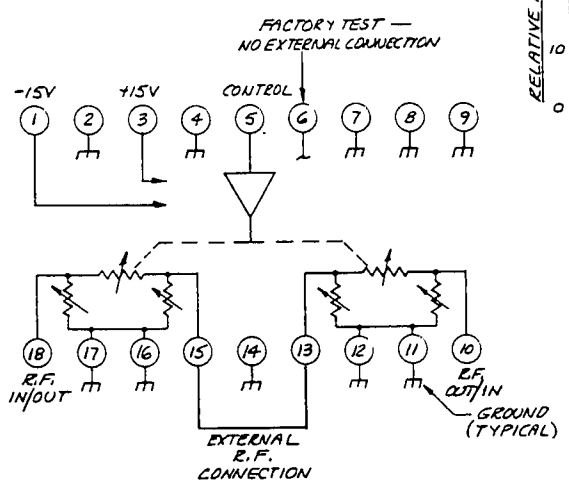

11. DC POWER: +15 VOLTS AT 30 MA
    -15 VOLTS AT 40 MA
10. PHASE STABILITY: 2.5 DEGREES PER DB PER GHZ MAXIMUM CHANGE OVER THE SPECIFIED ATTENUATION RANGE.
9. CONTROL: 0 TO +5 VOLTS (AT 10K OHMS NOMINAL INPUT IMPEDANCE)
8. ATTENUATION: RANGE; 40 DB MINIMUM
   LINEARITY; ±2 DB FROM BEST STRAIGHT LINE FIT FROM (I.L. +2 DB) TO (I.L. +40 DB)
   SLOPE; 15 ± 3 DB PER VOLT
7. INSERTION LOSS: 3.5 DB MAXIMUM
6. VSWR: 1.25/1 MAXIMUM
5. IMPEDANCE: 50 OHMS
4. RF POWER: +15 DBM MAXIMUM
3. FREQUENCY: 100 - 300 MHZ
2. PIN 18 IS INDICATED BY GLASS BEAD OF CONTRASTING COLOR
1. PART NUMBER IS DA0408

NOTES: ALL SPECIFICATIONS ARE TYPICAL UNLESS OTHERWISE SPECIFIED

ITEM No.	PART NUMBER	PART DESCRIPTION

LIST OF MATERIALS

QTY REQD PER NOTED ASSY

DIMENSIONS ARE IN INCHES
TOLERANCES ON
FRACTIONS ± 1/64 | DECIMALS .XX ± .02, .XXX ± .010 | ANGLES ±1°

REMOVE BURRS AND SHARP EDGES .015 MAX

ALL MACHINED SURFACES USAS B-46.1-62 ✓

MEET DIM. BEFORE PLATING

DRAWN	[illegible]	9/23/83
CHECK	[illegible]	9/24/83
ENG REL	[illegible]	10/7/83
MFG REL	[illegible]	2/7/84
MFG ENG	[illegible]	2/7/84
APPD	[illegible]	2-7-84

DAICO INDUSTRIES, INC.
COMPTON, CA 90220

TITLE: VOLTAGE CONTROLLED ATTENUATOR

MATERIAL

FINISH

APPL ECN

SIZE	CODE IDENT NO.	DWG NO.	REV
C	28983	150C0408	A

SCALE 2/1 | WT ——— | CALC | SHEET 1 OF 1

NEXT ASSY	USED ON	NEXT ASSY	FINAL ASSY
APPLICATION		QTY REQD	

REV A 150C0408

DAICO INDUSTRIES INC 52 DE 2604920 0000927 8
2604920 DAICO INDUSTRIES INC 52C 00927 D
T-74-09-01